LBNL Precision Measurement

One Cyclotron Road, 77/125
Berkeley CA, 94720
Ph. (510) 486-7611

Measurement Plan	Date	Order
Phenix FVTX Station 1 Sensor Backplane1	February 9, 2010	111-PHX-02-3601
Length unit	**Time**	**Incremental Part Number**
MM	8:28:36 am	2

	Actual	Nominal	Upper Tol.	Lower Tol.	Deviation
Flatness Plane Datum A	0.0329	0.0000	0.0500		|-- 0.0329
Flatness Plane Parallel to Datum A	0.0132	0.0000	0.0500		|-- 0.0132
Parallelism Plane Parallel to Datum A	0.0320	0.0000	0.0200		0.0120 0.0320

Flatness of Datum A

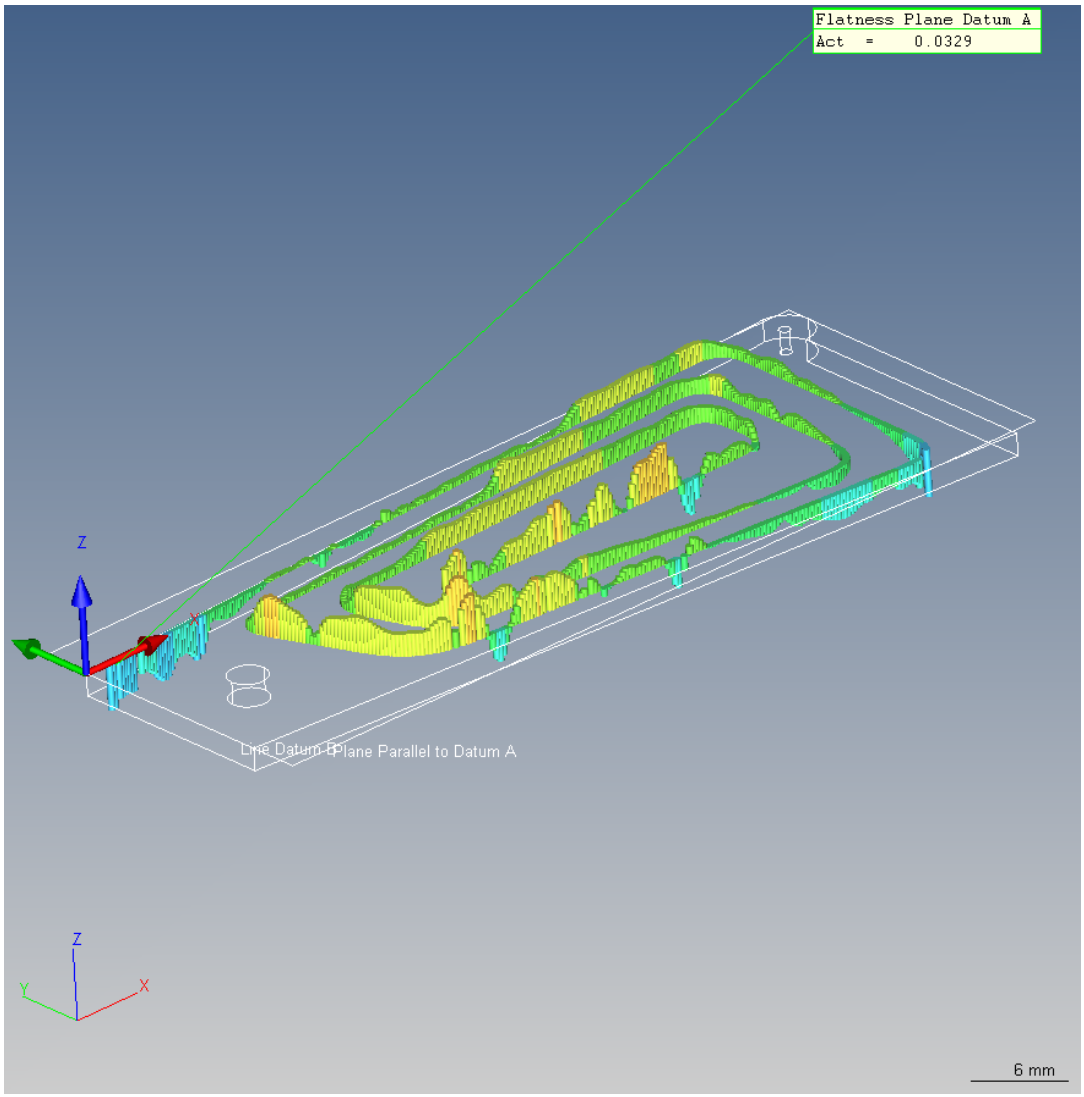
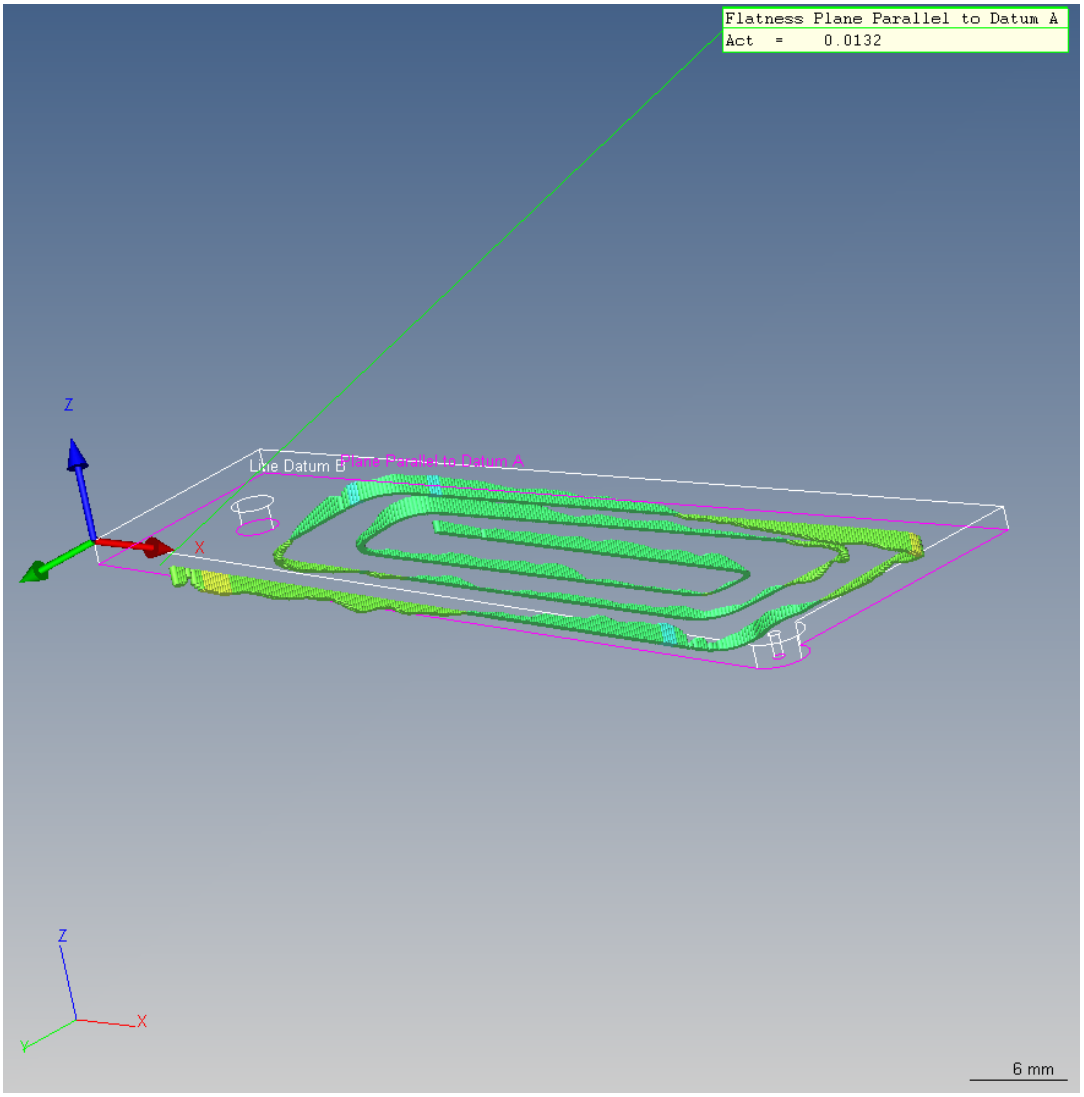
Flatness of Side Parallel to Datum A