LBNL Precision Measurement

One Cyclotron Road, 77/125
Berkeley CA, 94720
Ph. (510) 486-7611

Measurement Plan	Date	Order
Phenix FVTX Station 1 Sensor Backplane1	February 9, 2010	111-PHX-02-3601
Length unit	**Time**	**Incremental Part Number**
MM	8:37:45 am	3

	Actual	Nominal	Upper Tol.	Lower Tol.	Deviation
Flatness Plane Datum A	0.0361	0.0000	0.0500		|-- 0.0361
Flatness Plane Parallel to Datum A	0.0142	0.0000	0.0500		|-- 0.0142
Parallelism Plane Parallel to Datum A	0.0382	0.0000	0.0200		0.0182 0.0382

Flatness of Datum A

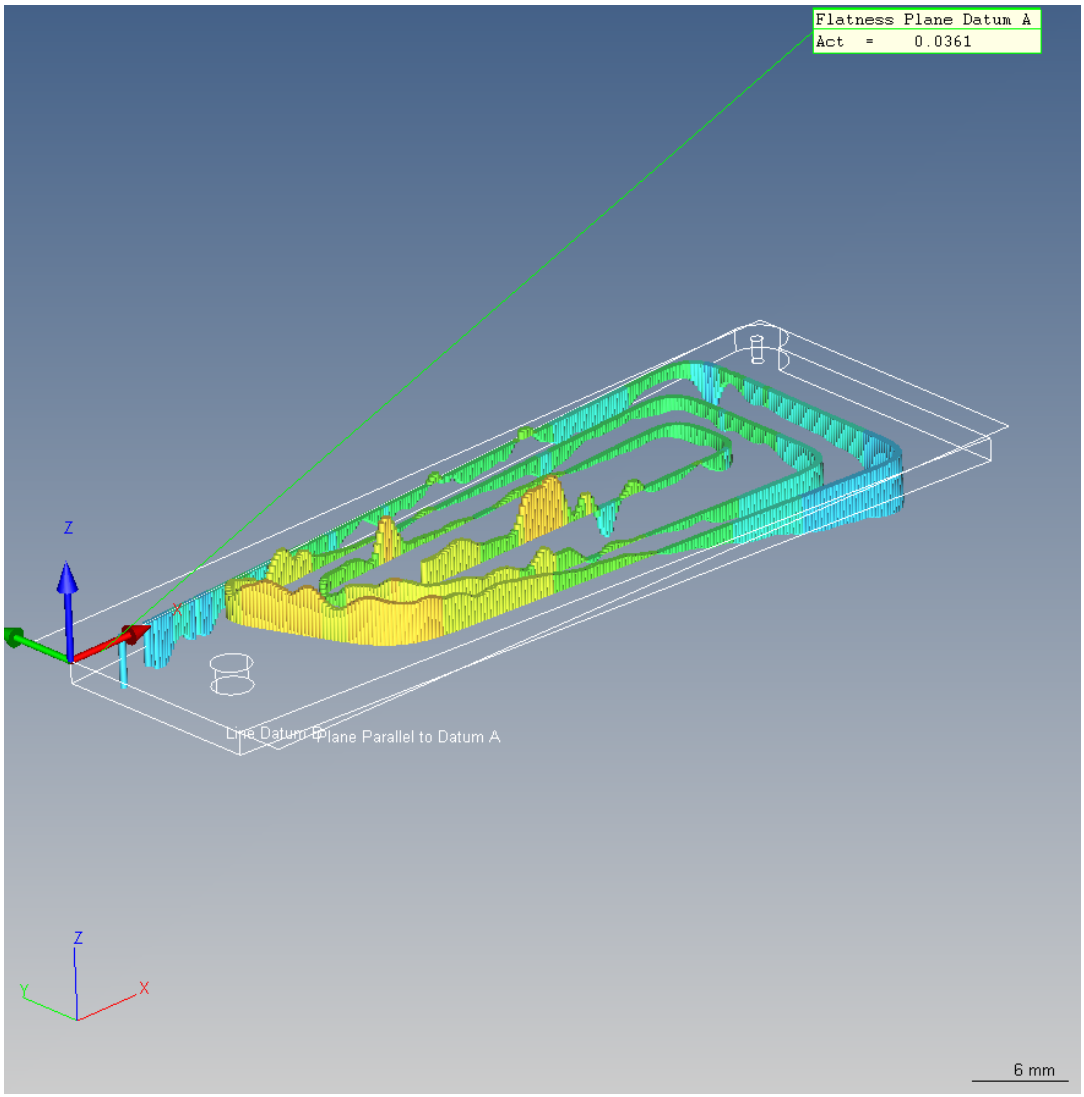
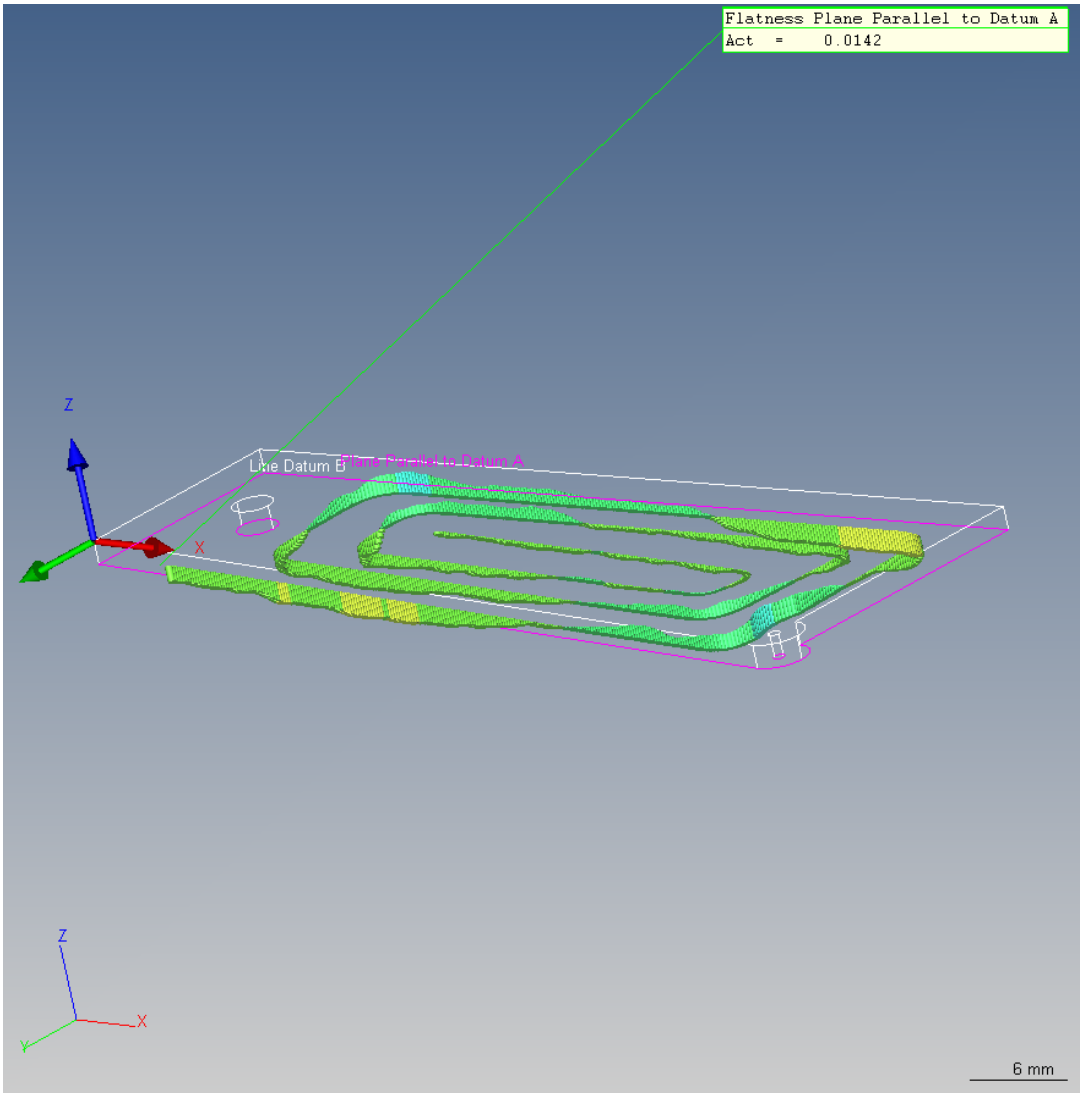
Flatness of Side Parallel to Datum A